JACKSON & McELHANEY ARCHITECTS

REGISTERED ARCHITECT MICHAEL A. McELHANEY 13681 STATE OF TEXAS

8/7/20

ADDENDUM NO. 1

PROJECT:
CARTS
Elgin Station
NW Corner of Central Avenue & Avenue C
Elgin, Texas 78621

ISSUED:
Friday, August 7th, 2020
Jackson & McElhaney Architects
3108 N. Lamar Blvd. Ste. 100
Austin, Texas 78705

NOTE: This addendum amends and thereby supersedes the Drawings, Project Manual and RFP on the referenced project.

(I) Item #1 - Bidder Question with Answer by Engineer:

Q. Would it be possible to have the AISC Certification waived?

A. This requirement **cannot** be waived.

(I) Item #2 - Bidder Question with Answer by Architect:

Q. Would you please post the Pre-Bid meeting attendees?

A. Please refer to the attached Virtual Pre-Proposal Conference Sign-In Sheet. Refer to the website for the Virtual Pre-Proposal Conference Recording.

(I) Item #3 - Bidder Question with Answer by Engineer:

Q. When reviewing the cistern notes on C104 it mentions controls. Can you please clarify what is intended? I was also wondering if this system would require pre filtration, or is that handled in the roof drain connection?

A. The intent is detailed in the Cistern Notes on C104 and expanded upon below:

1. During a storm event, stormwater runoff from the roof will be conveyed to the cistern.
2. The cistern will accumulate the runoff and is intended to hold up to 2,015 gal of runoff from the roof for 12 hours. This means that a control system would need to have the capabilities to identify that storm runoff is present. This can be signaled by an on float for

example (or some other approved means). Between t=0 hrs. and t=12 hrs. all the roof runoff is collected in the cistern and the discharge is 0.
3. The controls will need to be provided in order to delay discharge for 12 hours.
4. After 12 hours, the cistern releases the stored water at a rate such that the cistern is empty in 48 hrs.
5. Again, a float (or other means) will indicate that cistern is empty and the discharge of the cistern returns to zero (i.e. closed orifice). Controls will reset the 12 hr. timer and is ready for next storm event.

(I) Item #4 - The drawings were reviewed by a Registered Accessibility Specialist (RAS) for compliance with Texas Accessibility Standards (TAS). A Plan Review report was provided by the RAS. JMA has made revisions to the drawings in response to this TAS Plan Review report. Refer to attached TAS Plan Review Response Letter by JMA and incorporate the revisions into the project. The revisions are summarized below:

A. Refer to attached Cover Sheet. Replace existing sheet with this new sheet. Revisions include:

- New sheet SK-11 added into Sheet Index

B. Refer to attached Sheet SK-3 Clarification Plan Diagrams. Replace existing sheet with this new sheet. Revisions include:

- Typical CMU and Metal Stud Door Jamb Call-Outs
- Revised Kitchen/Break Casework
- Additional Restroom Notes and New Interior Elevation Keys

C. Refer to attached Sheet SK-4 Clarification Building Section. Replace existing sheet with this new sheet. Revisions include:

- Revised Kitchen/Break Casework

D. Refer to attached Sheet SK-5 Clarification Details. Replace existing sheet with this new sheet. Revisions include:

- Revised Kitchen/Break Casework

E. Refer to attached Sheet SK-6 Clarification Details. Replace existing sheet with this new sheet. Revisions include:

- New Door Jamb at CMU detail and Door Jamb at Metal Stud detail

F. Refer to attached Sheet SK-11 Clarification Interior Elevations. Incorporate this new sheet into the project.

END OF ADDENDUM NO. 1 SUMMARY

Attachments:

- (One (1) 8.5”x11” pages) Virtual Pre-Proposal Conference Sign-In Sheet, dated July 28, 2020
- (Two (1) 8.5”x11” page) TAS Plan Review Response Letter, dated 8/7/20
- (Five (5) 22”x34” sheets) Revised sheets Cover Sheet, SK-3, SK-4, SK-5, and SK-6, dated 8/7/20.
- (One (1) 22”x34” page) NEW sheet SK-11, dated 8/7/20

CARTS Elgin Station

Virtual Pre-Proposal Conference – July 28, 2020 – 11:00 AM

Sign-In Sheet

Attendees:

Name:	Company:
1. Derek Goodall, Director of Facilities	CARTS
2. Mike McElhaney, Project Architect	JMA
3. Tara Jones, Project Manager	JMA
4. Jerry Rodriguez	BEC Austin
5. Jason Martin	BEC Austin
6. Justin Hyatt	G. Hyatt Construction
7. Robert Daley	Teal Construction

August 7TH, 2020

Larry Stewart, Registered Accessibility Specialist, #1309
CTx Accessibility
8008 Richard King Trail
Austin, TX 78749

Project Name: CARTS Elgin Station
Re: Plan Review Response

Dear Mr. Stewart,

The following responses correspond to your Plan Review comments dated July 28, 2020:

1. Plan 01/A101 shows doors D1 through D6 with the push side of the door recess approximately 11" from the doorway wall. TAS 404.2.4 requires a door, with the push side recessed more than 8" from the doorway wall and having both a latch and closer, to have a clear door maneuvering space of 1) the width of the door plus 12" on the latch side (parallel to the doorway and within 8" of the door's face) by 2) 48" (perpendicular to the doorway). As there is insufficient space, within 8" of the door's face, for the required clear door maneuvering space, these doors are non-compliant.

Response: The placement of the door within the wall is a graphics/software issue that cannot be fixed. For clarification on the door jambs, new details have been added to the project to show that the door jamb depth shall not be more than 8" from the face of wall to the face of the door. Please see new details 2SK-6, and 3SK-6.

2. Plan 01/A401 and 02/A401 show the bottom of the mirror's reflective surface located at 42 ½" AFF. As TAS 603.3 requires mirrors, located over a sink or countertop to have their bottom reflective surface located below 40" AFF, these mirror are non-compliant.

Response: See new sheet SK-11. These new interior elevations will supersede the interior elevations on sheet A401.

3. Plan 06/A401 shows cabinet door under the sink. TAS 306, via TAS 606.2, requires a clear toe and knee space under a sink that is 1) 30" wide by 2) 8" horizontal at 27" AFF which expands to 11" horizontal at 9" AFF which again expands to 17" horizontal between the floor and 9" AFF. As there is insufficient space for the required toe and knee space, this sink is non-compliant.

Response: Please see the revised 1SK-4, and 2SK-5. The required ADA toe and knee space has been added to the Kitchen/Break sink. The revised Kitchen/Break casework will supersede the interior elevation on sheet A401.

4. Plans 03.A401 shows the restroom sinks' basins, at 8" horizontal from the front of the sink, being located at 28 ½" AFF. TAS 306.3, via TAS 606.2, requires a cl knee space under a sink that is 1) 30" wide by 2) 8" horizontal at 27" AFF which expands to 11" horizontal at 9" AFF. As there is insufficient space for the required knee space, these sinks are non-compliant.

Response: See new sheet SK-11. These new interior elevations will supersede the interior elevations on sheet A401. This new sheet shows the correct sink and the required ADA toe and knee clearance.

5. Plan 04/A401 shows the toilet paper dispenser's ℄ located approximately 12 ½" in front of the toilet front rim. As TAS 604.7 requires a toilet paper dispenser's ℄ to be located between 7" and 9" in front of the toilet's front rim, these dispensers are non-compliant.

Response: See new sheet SK-11. These new interior elevations will supersede the interior elevations on sheet A401.

Please let us know if you have any questions.

Sincerely,

Michael McElhaney, AIA, LEED AP

Attachments:

- (5) 22"x34" Revised sheets Cover Sheet, SK-3, SK-4, SK-5, and SK-6, dated 8/7/20
- (1) 22"x34" NEW sheet SK-11, dated 8/7/20

CARTS
Capital Area Rural Transporation System

Elgin Station

NW Corner of Central Avenue & Avenue C
Elgin, Texas 78621

RENDERING BY HATCH + ULLAND OWEN ARCHITECTS

THIS PROJECT WAS ORIGINALLY DESIGNED BY HATCH-ULLAND OWEN ARCHITECTS (THE ARCHITECT OF RECORD). JACKSON & MCELHANEY ARCHITECTS (JMA) IS PERFORMING THE REQUEST FOR PROPOSALS (RFP) PHASE AND THE CONSTRUCTION OBSERVATION PHASE FOR THE PROJECT. THEREFORE, ALL QUESTIONS AND COMMUNICATION SHALL GO THROUGH JMA AND THE CONTACTS LISTED IN THE RFP DOCUMENTS.

JMA HAS PROVIDED CLARIFICATION SKETCHES SK-1 THROUGH SK-10 FOR ITEMS THAT NEEDED TO BE EDITED OR CLARIFIED FOR THE RFP AND CONSTRUCTION PHASES. THIS SET OF SKETCHES AMENDS AND SUPERSEDES THE ORIGINAL ARCHITECTURAL DRAWINGS.

CONSTRUCTION OBSERVATION ARCHITECT:

Jackson & McElhaney Architects
3108 North Lamar Blvd., Suite 100
Austin, Texas 78705
512.472.5132

CIVIL ENGINEER:

Jose I. Guerra, Inc.
2401 South IH-35
Austin, Texas 78741
512.445.2090

STRUCTURAL ENGINEER:

Jose I. Guerra, Inc.
2401 South IH-35
Austin, Texas 78741
512.445.2090

MEP ENGINEER:

Jose I. Guerra, Inc.
2401 South IH-35
Austin, Texas 78741
512.445.2090

LANDSCAPE ARCHITECT:

Pharis Design Planning & Landscape Architecture
2525 South Lamar Blvd. #4
Austin, Texas 78704
512.853.9682

ARCHITECT OF RECORD:

Hatch + Ulland Owen Architects
1010 East 11th Street
Austin, Texas 78702
For questions during RFP and construction phases,
contact Jackson & McElhaney Architects (Construction Observation Architect)

Date: 7-21-2020

1 ADDENDUM NO. 1: 8/7/20

REGISTERED ARCHITECT MICHAEL A. McELHANEY 13681 STATE OF TEXAS
8/7/2020

JMA
JACKSON & McELHANEY ARCHITECTS
3108 North Lamar Blvd, Suite 100, Austin TX 78705
Phone: (512) 472-5132
www.JacksonMcElhaney.com

SHEET INDEX:

	COVER SHEET
ARCHITECTURAL	
A002	GENERAL NOTES
A003	ACCESSIBILITY REQUIREMENTS
AS101	SITE PLAN
A101	FLOOR PLAN
A121	ROOF PLAN, REF. CEILING PLAN
A201	ELEVATIONS
A202	ELEVATIONS
A301	SECTIONS
A302	WALL SECTIONS & DETAILS
A401	INTERIOR ELEVATIONS & SCHEDULES
JMA - CLARIFICATIONS SKETCHES	
SK - 1	CLARIFICATION GENERAL NOTES
SK - 2	FOUNDATION SLOPE DIAGRAM
SK - 3	CLARFICATION PLAN DIAGRAMS
SK - 4	CLARIFICATION BUILDING SECTION
SK - 5	CLARIFICATION DETAILS
SK - 6	CLARIFICATION DETAILS
SK - 7	CLARIFICATION SCHEDULES
SK - 8	CLARIFICATION WINDOW SCHEDULE/LEGEND
SK - 9	CLARIFICATION WINDOW SCHEDULE/LEGEND
SK - 10	ROOF DETAILS
1 SK - 11	CLARIFICATION INTERIOR ELEVATIONS
STRUCTURAL	
S101	STRUCTURAL GENERAL NOTES
S102	STRUCTURAL GENERAL NOTES
S103	SPECIAL INSPECTIONS & ABBREV.
S201	FOUNDATION PLAN
S202	ROOF FRAMING PLAN
S301	TYPICAL FOUNDATION DETAILS
S302	TYPICAL CMU DETAILS
S303	TYPICAL DEVELOPMENT SPLICE
S304	FOUNDATION DETAILS
S305	TOWER FOUNDATION
S401	TYPICAL STEEL FRAMING DETAILS
S402	TYPICAL STEEL FRAMING DETAILS
S501	STEEL FRAME ELEVATIONS
S502	STEEL FRAME SECTION & DETAILS
S502-A	STEEL FRAME SECTION
S502-B	STEEL FRAMING DETAILS
S503	TYPICAL STEEL FRAMING CONN. DETAILS
MEP	
MEP001	MEP LEGENDS & GEN. NOTES
MEP101	MEP SITE PLAN
MECHANICAL	
M201	MECHANICAL FLOOR PLAN
M301	MECHANICAL DETAILS & SCHEDULES
ELECTRICAL	
E100	SITE PHOTOMETRICS PLAN
E201	ELECTRICAL LIGHTING PLANS
E301	ELECTRICAL POWER PLAN
E401	ELECTRICAL DETAILS
E402	ELECTRICAL DETAILS
E403	ELECTRICAL DETAILS
E501	ELECTRICAL SCHEDULES
PLUMBING	
P201	PLUMBING PLANS
P301	PLUMBING RISERS
P401	PLUMBING DETAILS
P501	PLUMBING SCHEDULES
P502	PLUMBING SCHEDULES
CIVIL	
C100	CIVIL EROSION & SEDIMENTATION CONTROL PLAN
C101	CIVIL EROSION & SEDIMENTATION CONTROL DETAILS
C102	CIVIL PRE-DEVELOPMENT DRAINAGE MAP
C103	CIVIL POST-DEVELOPMENT DRAINAGE MAP
C104	CIVIL WATER QUALITY CONTROL PLAN
C200	CIVIL DEMOLITION PLAN
C300	CIVIL UTILITY PLAN
C400	CIVIL GRADING AND SITE PLAN
C500	CIVIL DETAILS
C501	CIVIL DETAILS
C502	CIVIL DETAILS
C503	CIVIL DETAILS
C504	CIVIL DETAILS
LANDSCAPE	
L1.1	GENERAL NOTES
L1.2	SITE FURNISHING PLAN
L2.1	PLANTING PLAN
L2.2	DETAILS AND SCHEDULES
L3.1	IRRIGATION PLAN
L3.2	DETAILS AND NOTES

LOCATION MAP:

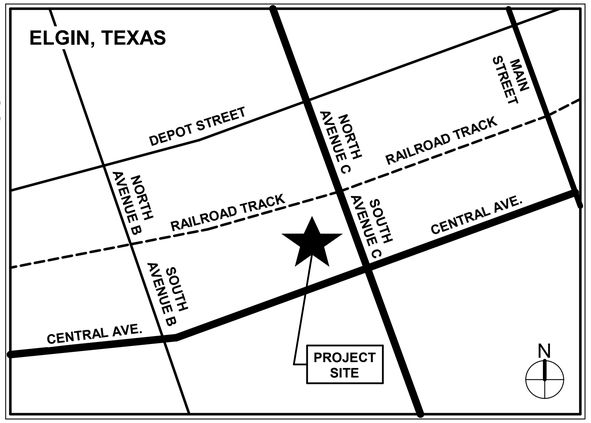

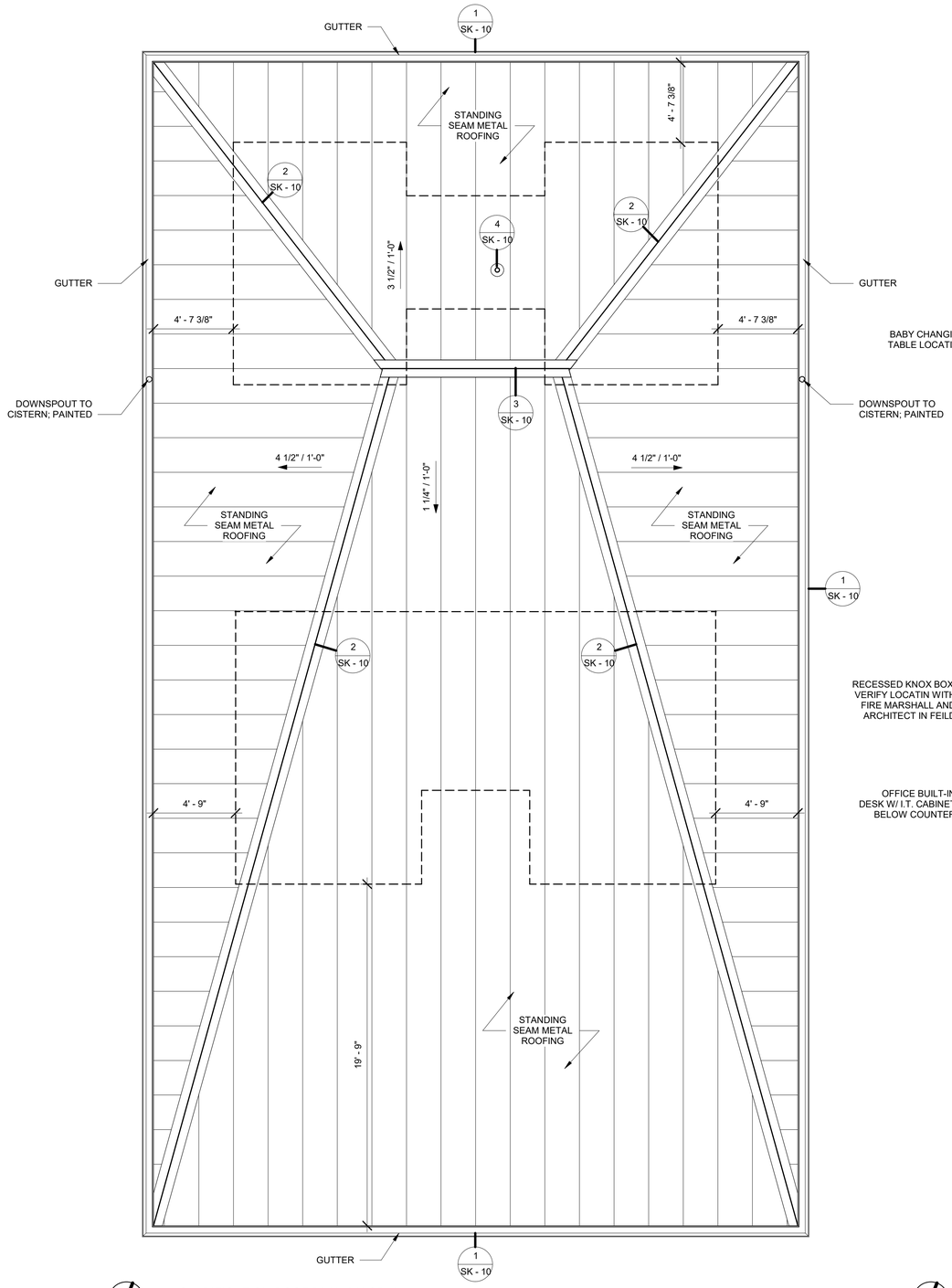

2 CLARIFICATION ROOF PLAN DIAGRAM
1/4" = 1'-0"

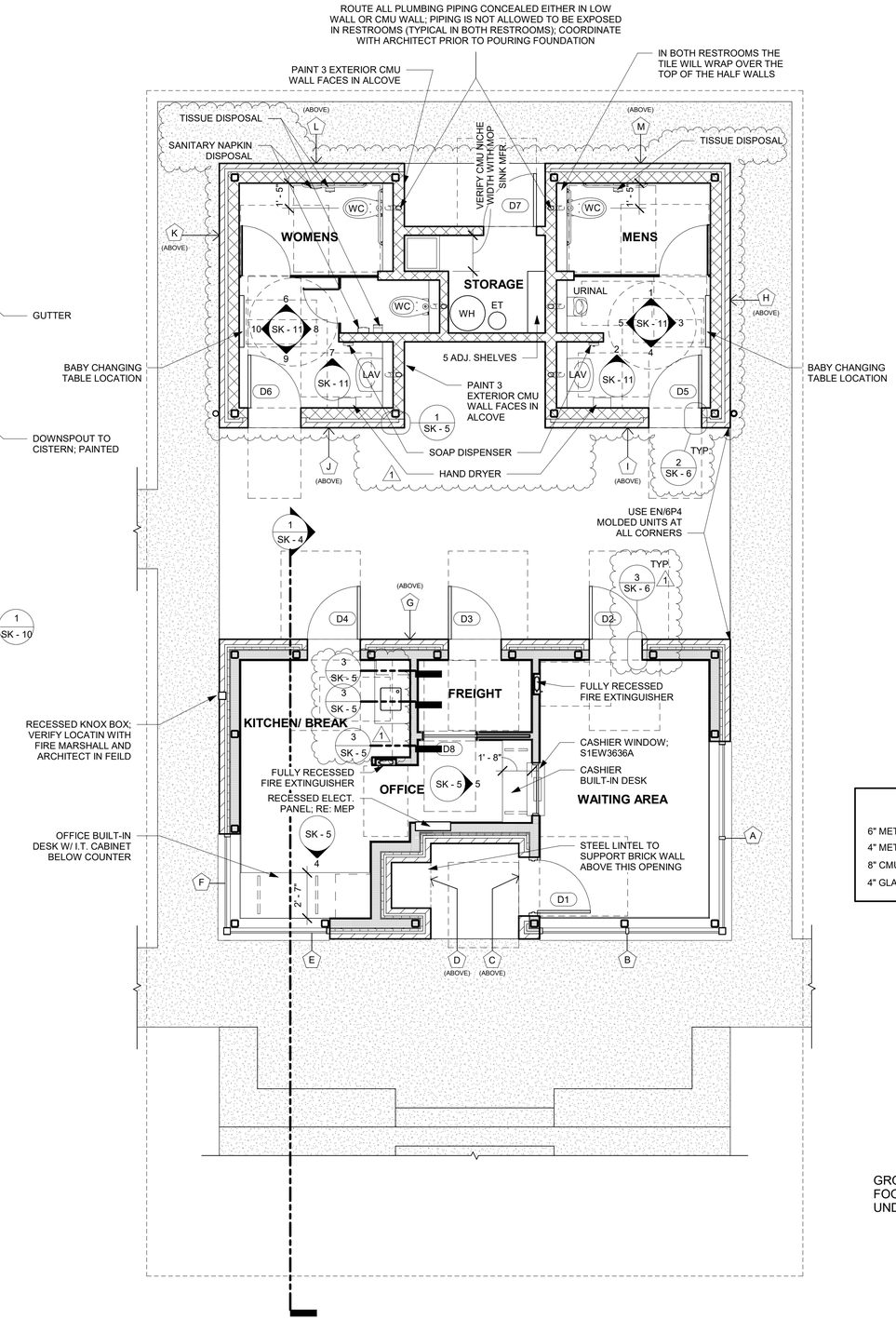

1 CLARIFICATION FLOOR PLAN DIAGRAM
1/4" = 1'-0"

WALL LEGEND:

- 6" METAL STUD WALL
- 4" METAL STUD WALL
- 8" CMU WALL
- 4" GLAZED BRICK VENEER

GROSS SQUARE FOOTAGES:
FOOTPRINT - 833 SF
UNDER ROOF - 2,633 SF

8/7/2020

JACKSON & McELHANEY ARCHITECTS
3108 N. Lamar Blvd., Suite 100, Austin TX 78705
Phone: (512) 472-5132
www.JacksonMcElhaney.com

CARTS
Elgin Station
NW Corner of Central Avenue & Avenue C
Elgin, Texas 78621

Date:
7-21-2020

Revisions:

1	ADDENDUM NO.1: 8/7/20

Sheet Title:
CLARFICATION PLAN DIAGRAMS

SK - 3

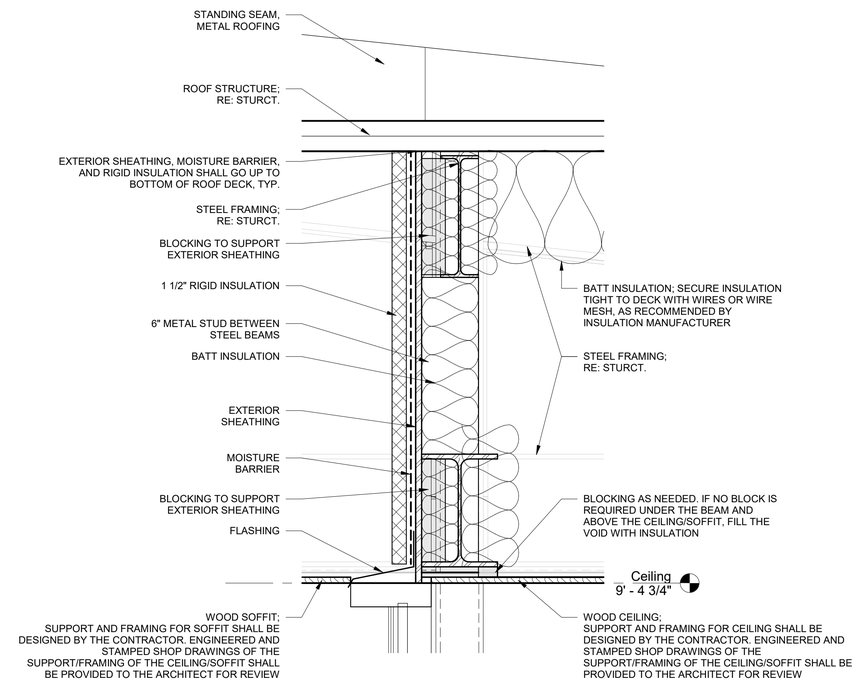

2 CLARIFICATION WALL ABOVE CEILING WALL SECTION
1 1/2" = 1'-0"

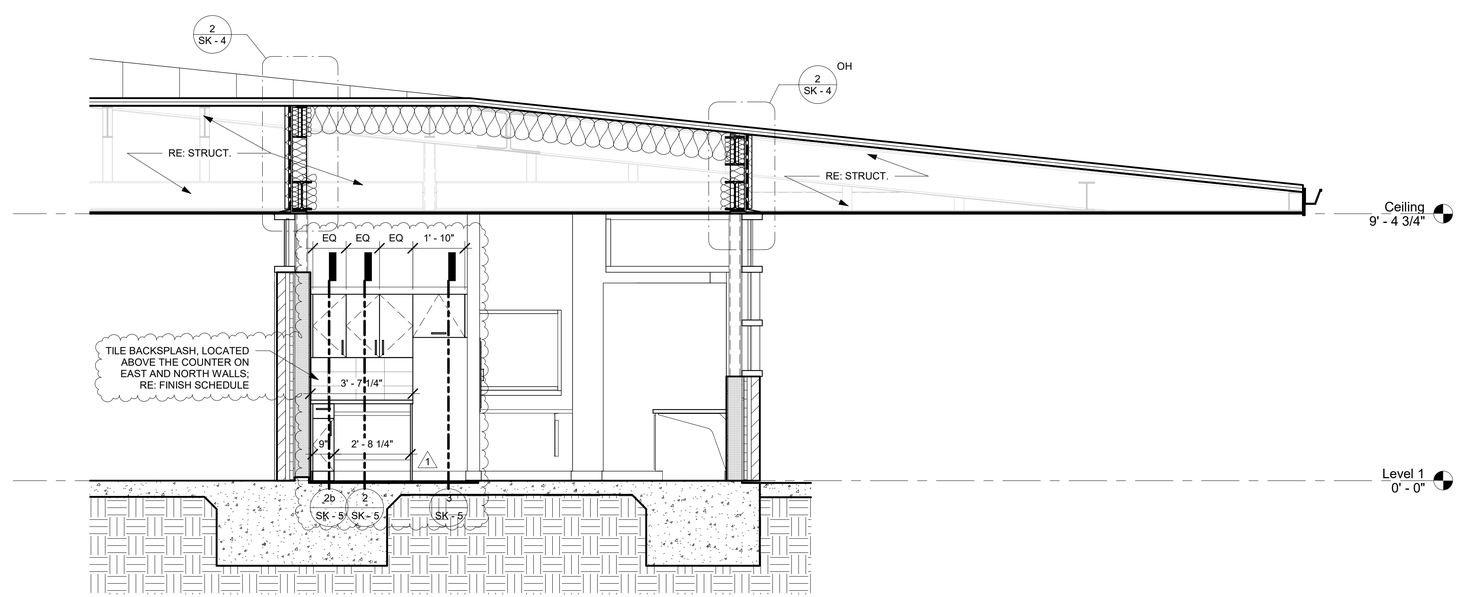

1 CLARIFICATION BUILDING SECTION
3/8" = 1'-0"

8/7/2020

JACKSON & McELHANEY ARCHITECTS
3108 N. Lamar Blvd., Suite 100, Austin TX 78705
Phone: (512) 472-5132
www.JacksonMcElhaney.com

CARTS
Elgin Station
NW Corner of Central Avenue & Avenue C
Elgin, Texas 78621

Date:
7-21-2020

Revisions:

1	ADDENDUM NO.1: 8/7/20

Sheet Title:
CLARIFICATION BUILDING SECTION

SK - 4

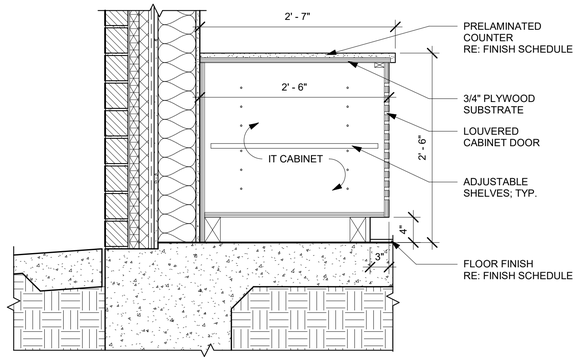

9 WORK SURFACE OFFICE SECTION 02
1" = 1'-0"

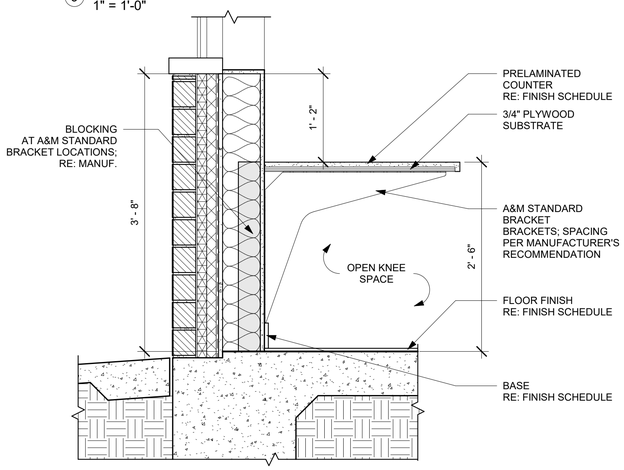

8 WORK SURFACE OFFICE SECTION 01
1" = 1'-0"

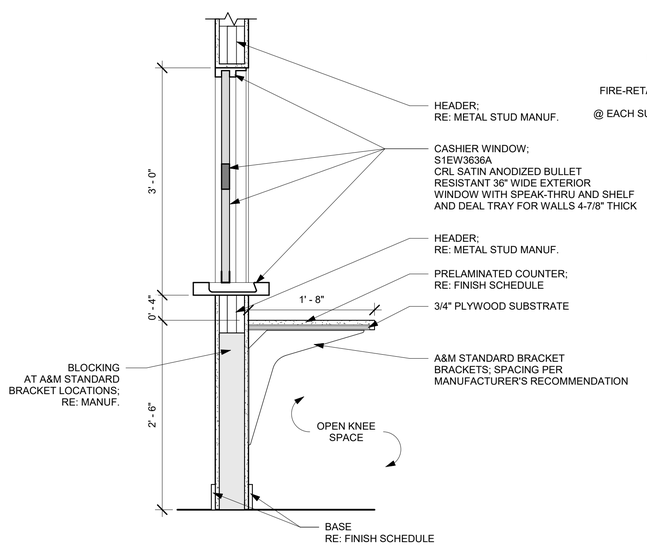

7 WORK SURFACE CASHIER SECTION
1" = 1'-0"

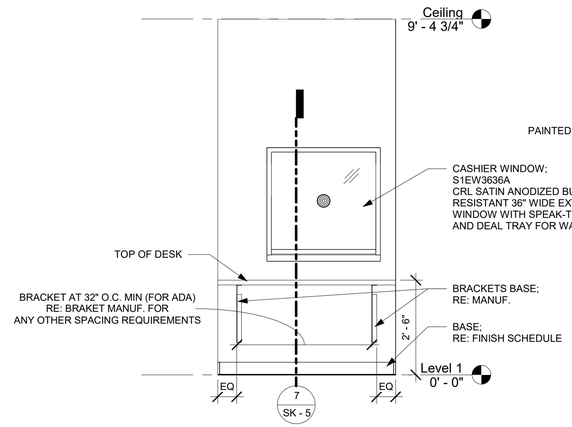

5 CASHIER DESK ELEVATION
1/2" = 1'-0"

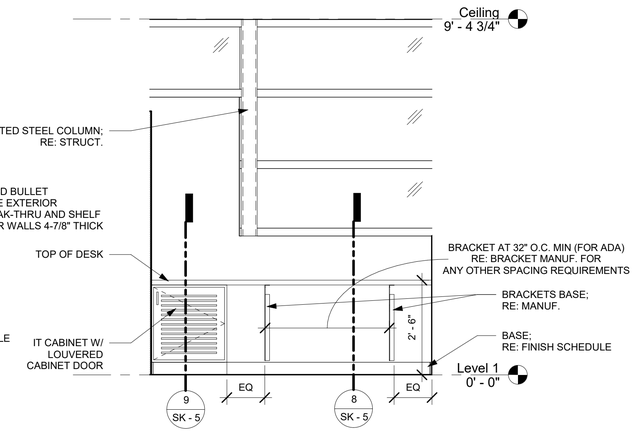

4 OFFICE DESK ELEVATION
1/2" = 1'-0"

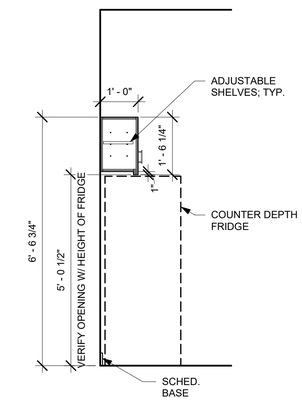

3 KITCHEN/BREAK CASEWORK AT FRIDGE
1/2" = 1'-0"

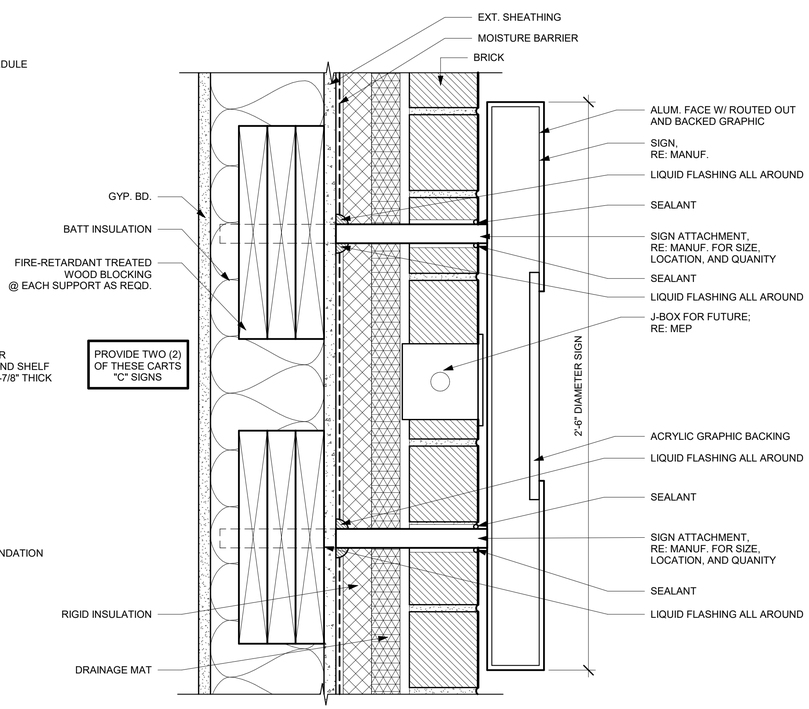

6 EXTERIOR CARTS "C" SIGN DETAIL
3" = 1'-0"

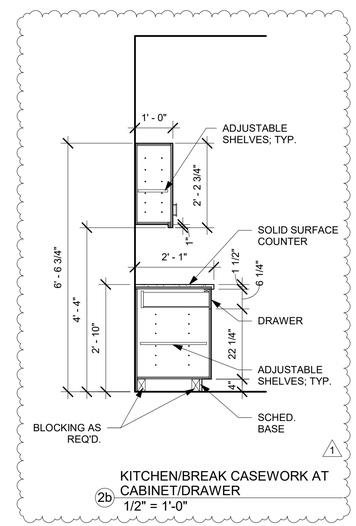

2b KITCHEN/BREAK CASEWORK AT CABINET/DRAWER
1/2" = 1'-0"

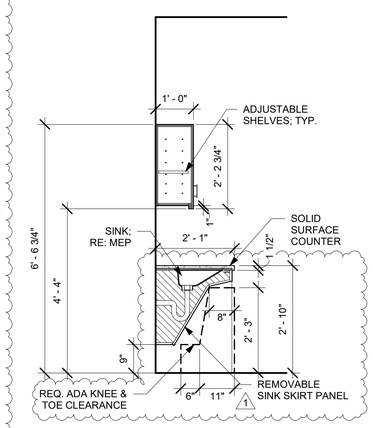

2 KITCHEN/BREAK CASEWORK AT SINK
1/2" = 1'-0"

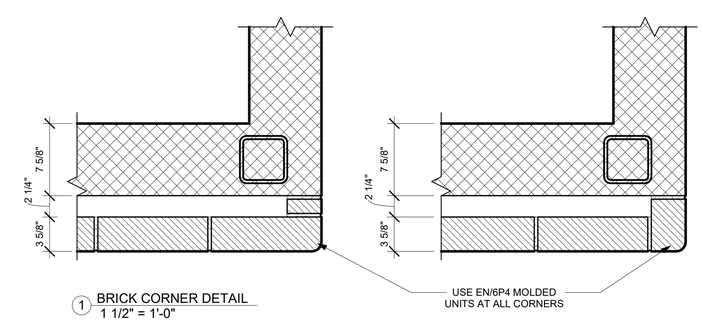

1 BRICK CORNER DETAIL
1 1/2" = 1'-0"

8/7/2020

JACKSON & McELHANEY ARCHITECTS
3108 N. Lamar Blvd., Suite 100, Austin TX 78705
Phone: (512) 472-5132
www.JacksonMcElhaney.com

CARTS
Elgin Station
NW Corner of Central Avenue & Avenue C
Elgin, Texas 78621

Date:
7-21-2020

Revisions:

1	ADDENDUM NO.1: 8/7/20

Sheet Title:
CLARIFICATION DETAILS

SK - 5

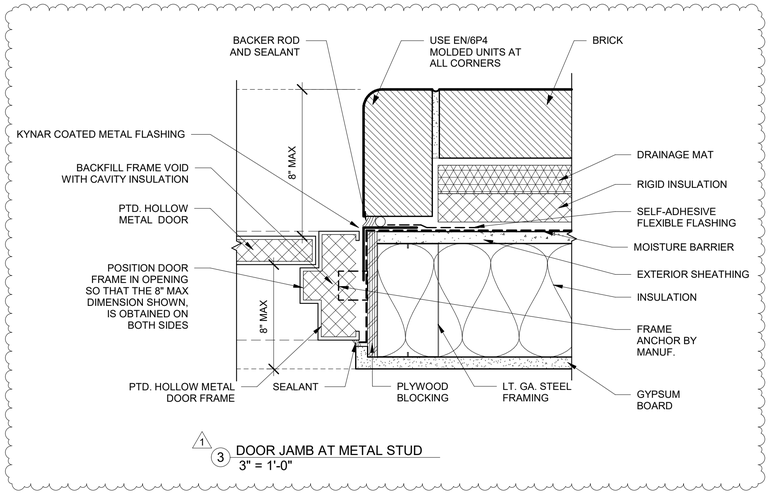

1 3 DOOR JAMB AT METAL STUD
3" = 1'-0"

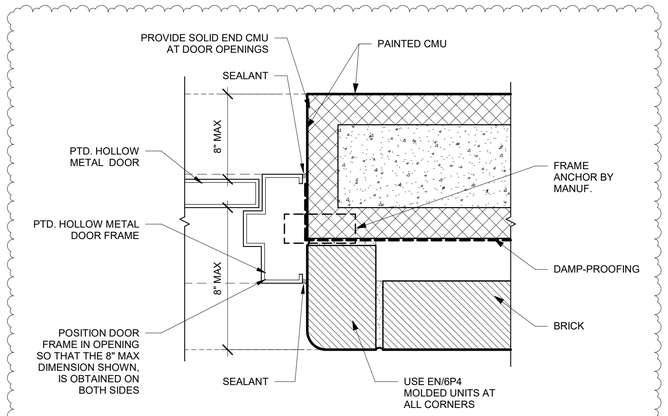

1 2 DOOR JAMB AT CMU
3" = 1'-0"

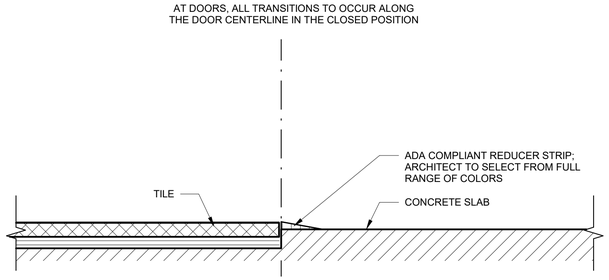

A. CERAMIC TILE TO CONCRETE

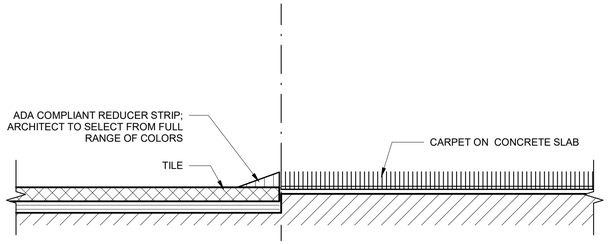

B. CERAMIC TILE TO CARPET

NOTE: IF REQUIRED, BRING DIFFERENT ABUTTING FLOOR FIN FLUSH W/ UNDERLAYMENT UP TO HIGHER SURFACE

1 Floor Transition Details
6" = 1'-0"

8/7/2020

JACKSON & McELHANEY ARCHITECTS
3108 N. Lamar Blvd., Suite 100, Austin TX 78705
Phone: (512) 472-5132
www.JacksonMcElhaney.com

CARTS
Elgin Station
NW Corner of Central Avenue & Avenue C
Elgin, Texas 78621

Date:
7-21-2020

Revisions:

1	ADDENDUM NO.1: 8/7/20

Sheet Title:
CLARIFICATION DETAILS

SK - 6

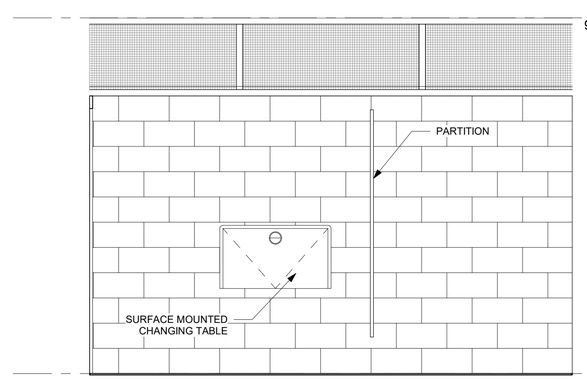

10 WOMENS WEST INTERIOR ELEVATION
1/2" = 1'-0"

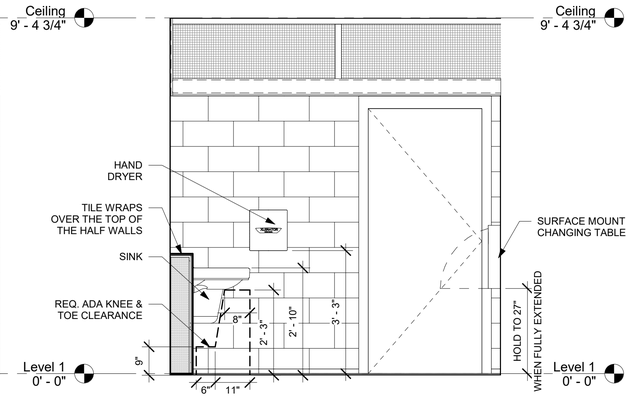

9 WOMENS SOUTH INTERIOR ELEVATION
1/2" = 1'-0"

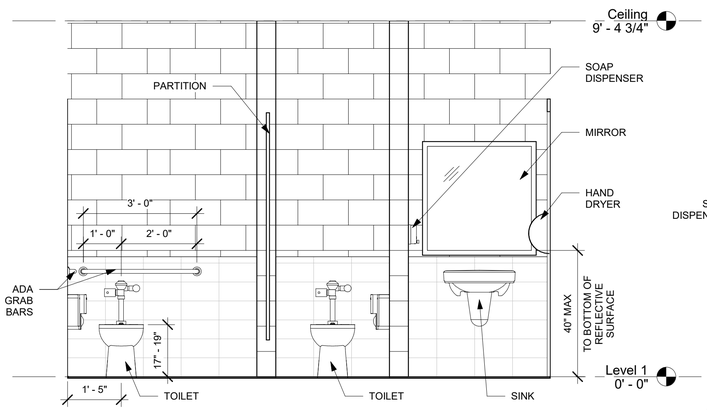

8 WOMENS EAST INTERIOR ELEVATION
1/2" = 1'-0"

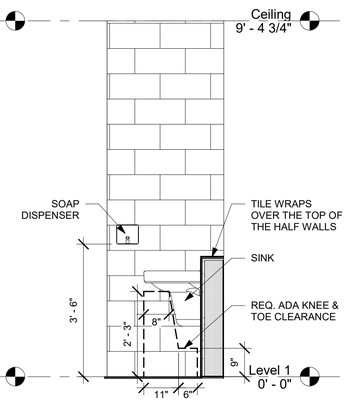

7 WOMENS NORTH INTERIOR ELEVATION 02
1/2" = 1'-0"

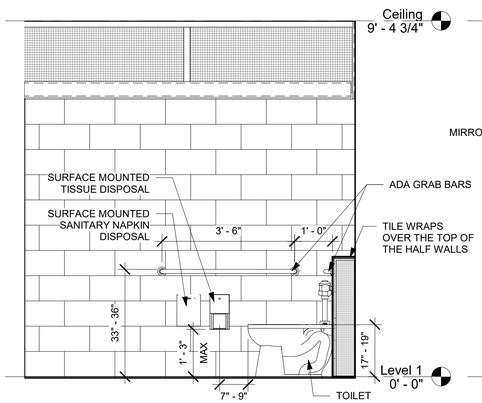

6 WOMENS NORTH INTERIOR ELEVATION 01
1/2" = 1'-0"

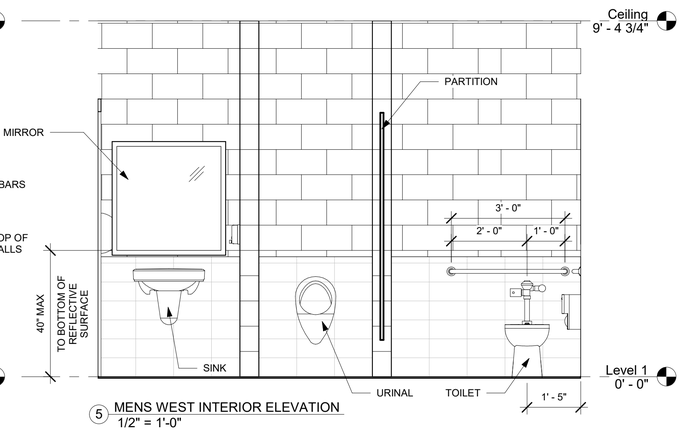

5 MENS WEST INTERIOR ELEVATION
1/2" = 1'-0"

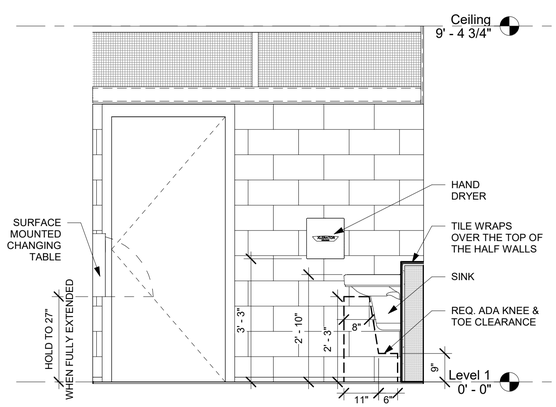

4 MENS SOUTH INTERIOR ELEVATION
1/2" = 1'-0"

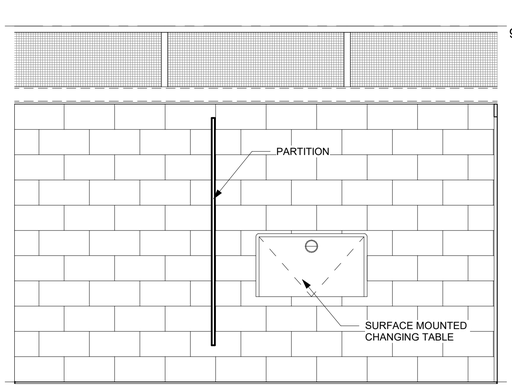

3 MENS EAST INTERIOR ELEVATION
1/2" = 1'-0"

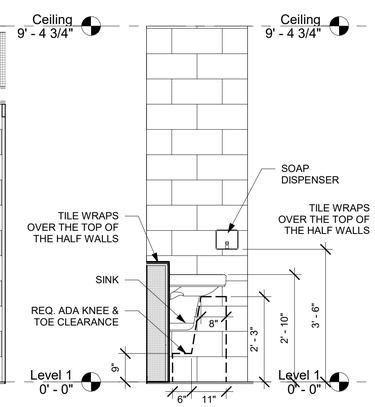

2 MENS NORTH INTERIOR ELEVATION 02
1/2" = 1'-0"

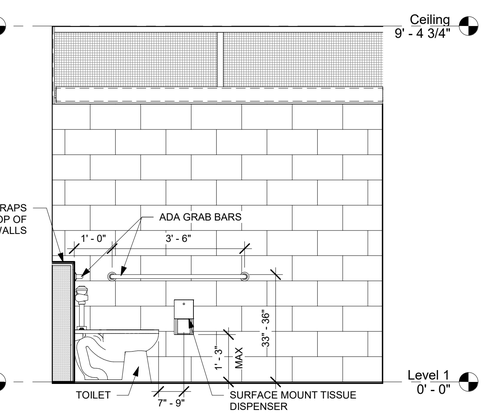

1 MENS NORTH INTERIOR ELEVATION 01
1/2" = 1'-0"

8/7/2020

JACKSON & McELHANEY ARCHITECTS
3108 N. Lamar Blvd., Suite 100, Austin TX 78705
Phone: (512) 472-5132
www.JacksonMcElhaney.com

CARTS
Elgin Station
NW Corner of Central Avenue & Avenue C
Elgin, Texas 78621

Date:
8-7-2020

Revisions:

1	ADDENDUM NO.1: 8/7/20

Sheet Title:
CLARIFICATION INTERIOR ELEVATIONS

1
SK - 11